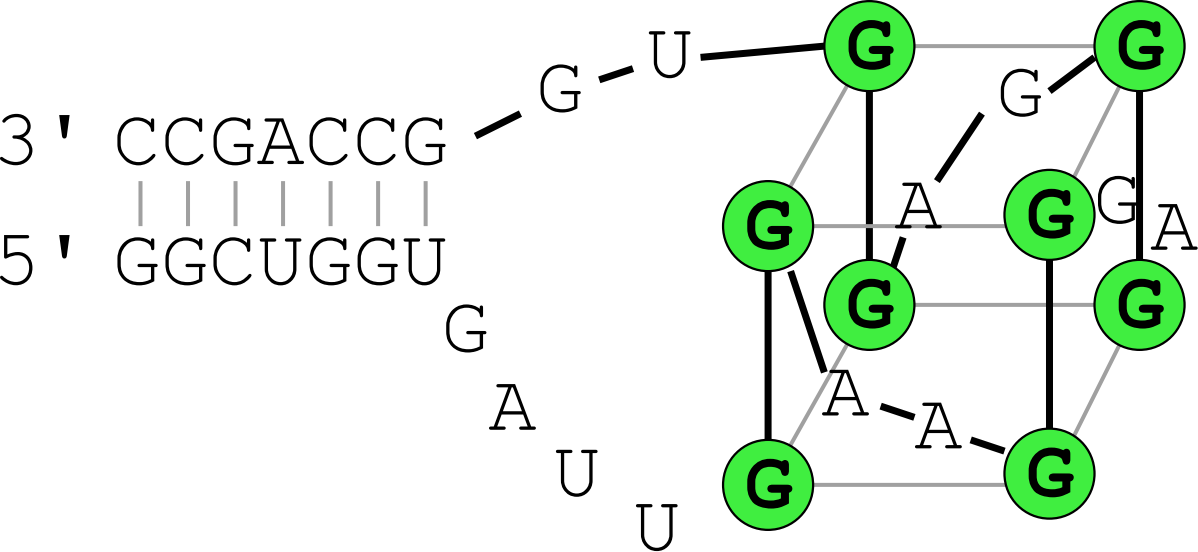
3' CCGACCG
5' GGCUGGU
G
A
U
U
G
U
G
G
G
A
G
G
A
G
G
A
A
G
G